EC&M®

EXECUTIVE SUMMARY

Mastering the 2026 NEC: Key Changes for Electrical Contractors

Presenter: Brian House, Vice President of Digital and Technical Training, Mike Holt Enterprises

FEBRUARY 24, 2026



KEY TAKEAWAYS

- Important changes to the NEC
- NEC 110: General Requirements for Electrical Installations
- Article 120: Branch-Circuit, Feeder, and Load Service Calculations
- Article 210: Branch Circuits
- Article 230: Services
- Article 300: General Requirements for Wiring Methods and Materials

in partnership with

ABB

Mastering the 2026 NEC: Key Changes for Electrical Contractors

OVERVIEW

The 2026 National Electrical Code (NEC) marks another year of significant change for the electrical industry. The most impactful updates in Articles 110 - 300 include revisions to working space requirements, continuous load calculations, GFCI protection rules, service disconnect requirements, and fire and water damage to wiring methods. Understanding these complex code changes helps electrical contractors, engineers, inspectors, and maintenance technicians avoid violations, improve safety, and streamline installations.

ABB is a global leader in high-quality, reliable electrical components and automation, specializing in safe, smart, and sustainable electrification for industrial, commercial, and utility applications. ABB's product portfolio covers a wide range of needs for modern electrical systems, including circuit protection, switchgear and controls, and installation materials and accessories.

CONTEXT

Brian House reviewed key changes to the National Electrical Code.

KEY TAKEAWAYS

Important changes to the NEC

For 2026, three major themes emerged from the most recent NEC Code change cycle: reduce, relocate, and reorganize. This cycle removed redundancies, added references where helpful, and simplified language. Articles were moved to more logical locations and similar topics were consolidated, in preparation for a major reorganization of the 2029 NEC. Long paragraphs were reorganized into lists and subsections to improve readability and field usability.

Most of the changes focused on improving readability and reducing ambiguity. However, several major 2026 NEC revisions in Articles 110-300 will affect field installation and inspection practices. These are important to understand.

NEC 110: General Requirements for Electrical Installations

Two notable NEC Article 110 rules—110.26 and 110.26(A)(1)—have been updated, clarifying door-open egress measurements and working space depth, respectively. Note: there are separate requirements.

110.26: Working Spaces for Equipment

Section 110.26 clarified the door swing rule—equipment doors that can be opened 90 degrees cannot restrict egress from working spaces. This rule was revised in consideration of the increase in data center construction projects, as data center electrical rooms typically have a high density of electrical equipment that constricts working space, which can impede safe egress.

Access to or egress from working space is considered impeded if one or more simultaneously opened equipment doors restrict working space access to less than 24 inches wide and 6.5 feet high. The rule applies if doors can open to 90°, even if they normally open further—design professionals must account for door swing clearance in planning stages.

110.26(A)(1): Depth of Working Space

The term "exposed live parts" was eliminated to clarify that working space measurements are made from the equipment enclosure front cover, not the live parts within the equipment. Removing the term prevents situations where required working space clearance is artificially reached by removing covers.

Mastering the 2026 NEC: Key Changes for Electrical Contractors

REVIEW: Minimum working space depth is determined by three conditions for working space

- **Condition 1.** The distance between enclosed parts and insulated material should be 3 ft at any voltage.
- **Condition 2.** The distance between enclosed parts and grounded parts should be 3 ft at 0-150V, 3.5 ft at 151-600V, and 4 ft at 601-1000V. (Voltage is measured voltage-to-ground, not line-to-line.)
- **Condition 3.** The distance between live parts to live parts should be 3 ft at 0-150V, 4 ft at 151-600V, and 5 ft at 601-1000V.

Figure 1: A working space depth violation



Article 120: Branch-Circuit, Feeder, and Load Service Calculations

The contents of Article 220 were relocated to a new Article 120, under Chapter 1—General Rules of the NEC, as load calculations apply generally to all installations.

120.5(E): Continuous Loads

The 2026 update states, "When determining the service, feeder, or branch-circuit load, continuous loads are not required to be calculated at 125%."

There are two reasons for calculating load: 1) to protect or size conductors; and 2) to size a service. The 125% continuous load multiplier applies when sizing conductors and overcurrent protective devices in accordance with Articles 210, 215, and 230.

However, when sizing a service, there is significant load diversity; not everything is on at the same time. Thus, the 125% continuous load multiplier does not apply when determining the service of feeder load in accordance with Article 120.

120.13: Number of Dwelling Unit Branch Circuits

When sizing the number of dwelling unit branch circuits for general lighting and receptacles, the load is based on not less than 3 VA per square foot. This is specific to branch circuits and not to be confused with the minimum unit load requirements defined in 120.41 for feeder and service load calculations.

Figure 2: The branch circuit starts at the final overcurrent device and ends where the load is connected

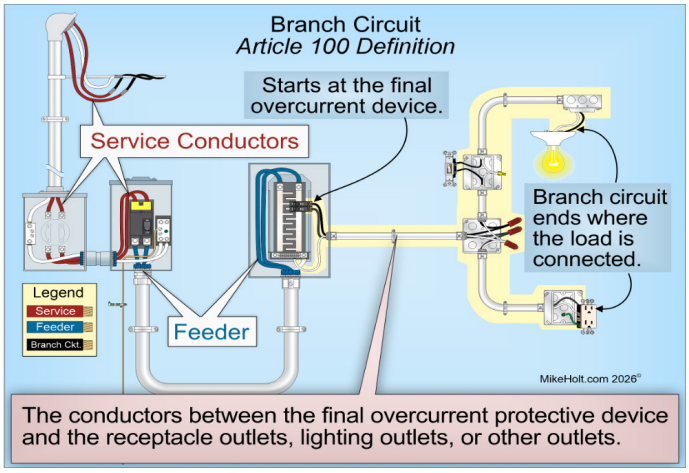

Mastering the 2026 NEC: Key Changes for Electrical Contractors

Article 210: Branch Circuits

Recent code revisions expanded GFCI requirements in Sec. 210.8(F) for outdoor dwelling-unit outlets.

210.8(F): GCFI—Outdoor dwelling outlets

The 2026 Code incorporates a significant expansion of this rule, increasing GFCI protection requirements for outdoor outlets in dwellings (such as pool heaters and air-conditioning compressors) from 50A to 60A. All outdoor outlets ≤60A for dwellings must now be GFCI-protected.

In the case of HVAC equipment, an exception was enacted two code cycles ago. A large portion of HVAC equipment is variable speed, generating high-frequency leakage; however, leakage current greater than 6 mA will trip a GFCI device.

The exception has given manufacturers time to devise an appropriate solution—a new type of GFCI (GCFI type HF). GFCI type HFs are designed for loads with high-frequency leakage currents from power conversion components such as variable frequency drivers and inverters, reducing nuisance tripping.

The HVAC equipment exception remains valid until September 1, 2026, after which HVAC equipment must comply with the GFCI rules in 210.8(F).

Figure 3: 210.8(F) expands GCFI protection requirements

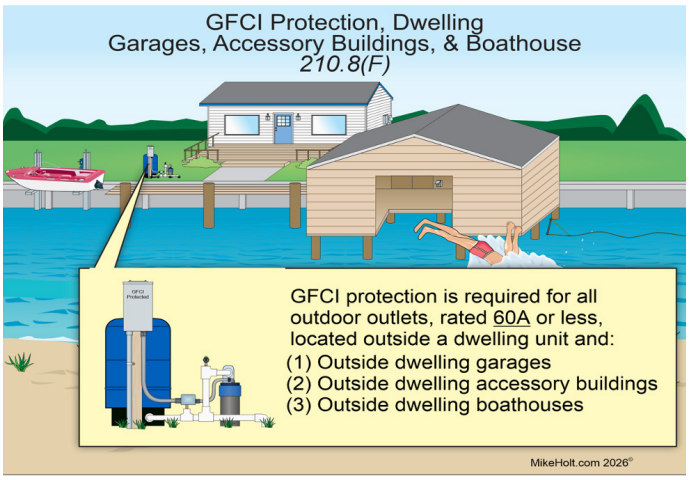

Article 230: Services

A "service" consists of the conductors and equipment for delivering electric energy from the serving utility to the service disconnect located at the premises served. The 2026 NEC includes revised service disconnect rules, including outdoor placement, exceptions, and new marking specifications.

230.70(A)(1): Service Disconnect Location One/ Two-Family Dwellings

Previous NEC versions provided detailed rules for emergency disconnects in 230.85 in addition to the rules defined in 230.70(A)(1). However, having two separate rules sections for service disconnects created confusion. The 2026 Code removes the 230.85 emergency disconnect rules, simplifying the requirements.

Now, the service disconnects for one- and two-family dwellings must be **outside**—either on the dwelling unit, or within sight of the dwelling unit in accordance with 110.29—and readily accessible.

An exception—**230.70(A)(1) Ex**—was added to clarify that the service disconnect is not required to be "within sight" if the feeder emergency disconnect as required by 225.41 is within sight and not more than 50 feet from the supplied dwelling unit, as the two serve the same purpose.

> "[230.70(A)(1) Ex] is an important change, because it allows you to have clarity of when you do and when you don't have to have the additional required disconnect for a dwelling unit building supplied by feeders."
>
> - *Brian House, Mike Holt Enterprises*

Mastering the 2026 NEC: Key Changes for Electrical Contractors

230.70(B): Service Disconnect Markings

Significant revisions to marking requirements of the service disconnect make it clear exactly how to label and where the label is required for service disconnects.

- **230.70(B)(1).** Service disconnects must be marked "SERVICE DISCONNECT" on or adjacent to the service disconnecting means. Markings such as "MAIN DISCONNECT" or "MAIN ELECTRIC DISCONNECT" or "MAIN SHUTOFF," etc. are violations of this rule. The marking must also be in accordance with 110.21(B)—suitable for the environment and durable.
- **230.70(B)(2).** One- and two-family markings must be located on the outside front of the disconnect enclosure marked "EMERGENCY DISCONNECT" with a red background and white text. Lettering must be at least 0.5" high.

230.70(F): Remote Control

Remote disconnect control requirements were clarified by stating that in no case is a remote-control device permitted to be used as the service disconnect. In other words: a shunt trip is not a service disconnect.

However, shunt trips may still be installed. In many areas, local fire codes even require one; however, a proper service disconnect must be installed regardless of whether a shunt trip is also installed.

Figure 4: Shunt trips do not replace suitable service disconnects



Article 300: General Requirements for Wiring Methods and Materials

A new rule helps determine when conductors and wiring methods must be replaced due to fire, heat, corrosion, or water damage.

300.4(C): Damaged Conductors and Wiring Methods

This new NEC rule states that overheated, fire- or water-damaged, or corroded conductors, wiring methods, and equipment must be replaced.

300.4(C) notes reference NEMA GD 1 and GD 2 for more information about electrical equipment and wiring methods damaged by water and by fire/heat, respectively. These documents provide standardized guidance instead of relying on contractor opinion.

Figure 5: NEMA documents provide guidance in situations such as flood recovery, hurricane response, and fire restoration

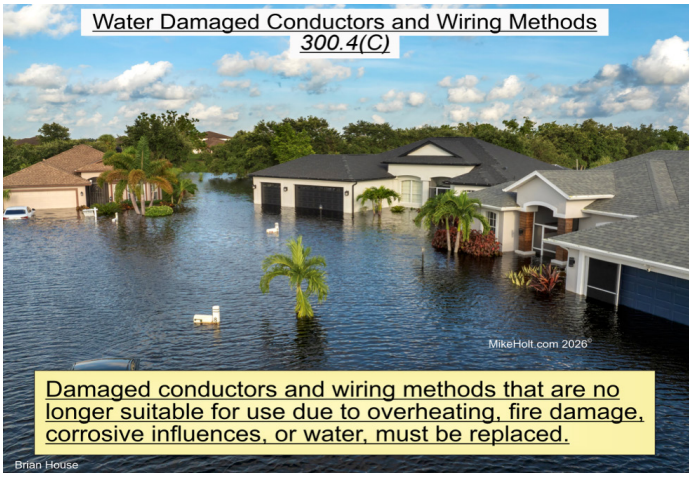

Mastering the 2026 NEC: Key Changes for Electrical Contractors

ADDITIONAL INFORMATION

To learn more about ABB products and solutions visit **ABB**

Stay up to date with the **ABB Contractor Resource Center**, where you can find educational information, products and solutions on maintaining productivity and profitability on all your projects.

BIOGRAPHY



Brian House
Vice President of Digital and Technical Training
Mike Holt Enterprises

Daniel Brian House is a Master Electrician, Instructor, Vice President of Digital and Technical Training at Mike Holt Enterprises, Ocala, Florida, and a Certified Mike Holt Instructor. He has worked in the trade since the '90s in residential, commercial, and industrial settings. His teaching style is practical, straightforward, and refreshing. He expresses his commitment to the industry and his love for its people through his teaching, working on books, and developing instructional programs and software tools.

© 2026 Endeavor Business Media. All rights reserved.